NO.	QTY.	TAG NO.	DESCRIPTION	MATERIAL	TYPE	L 1	L 2	L 3	PROCESS CONNECTION
1	1	XXX	DISPLACER LEVEL			mm	mm	mm	

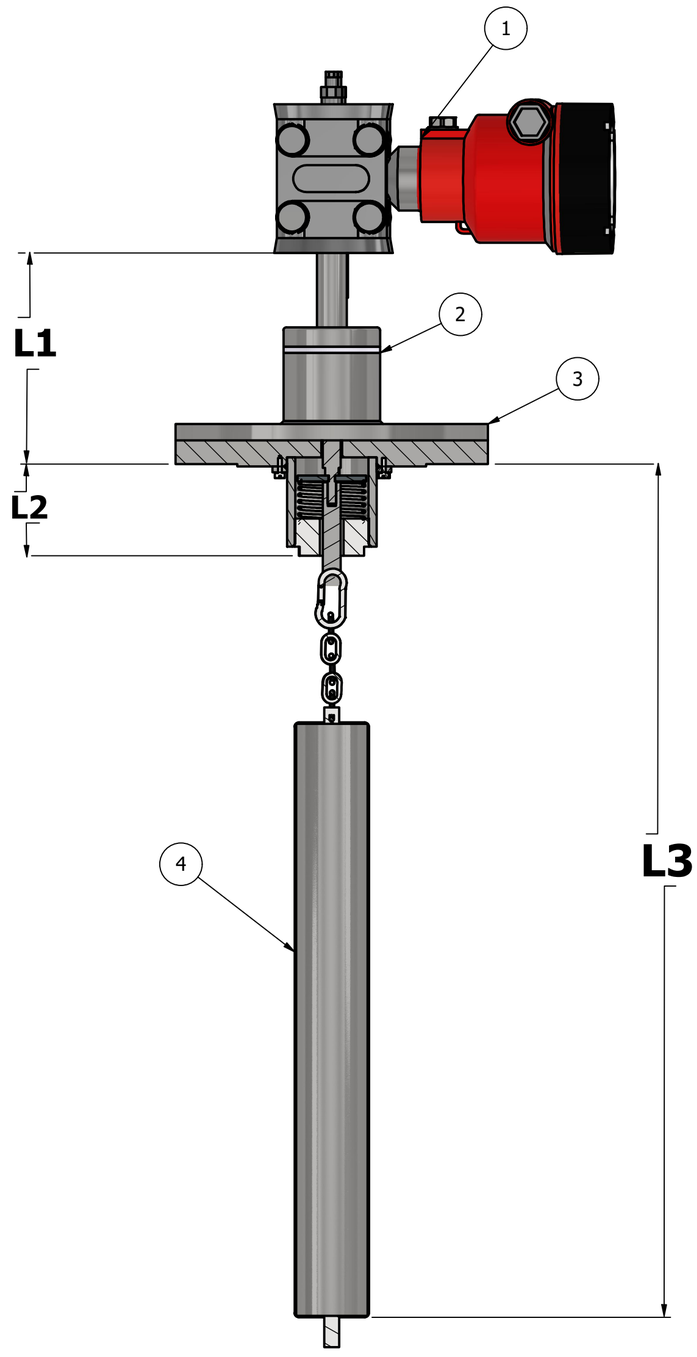

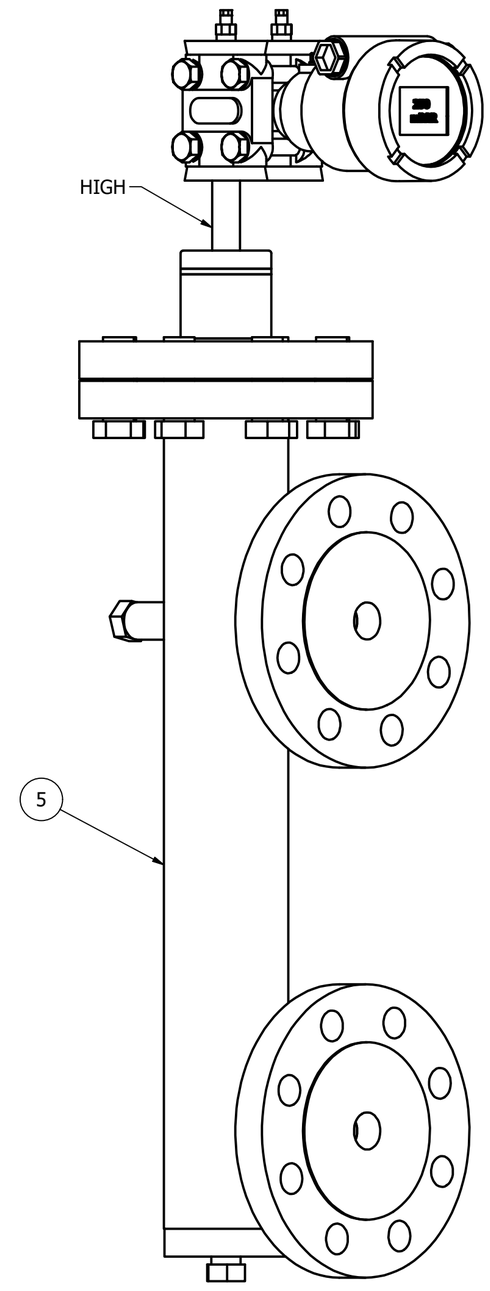

PARTS LIST			
ITEM	QTY	PART NUMBER	MATERIAL
1	1	TRANSMITTER	
2	1	HYDROLIC COUPLING	
3	1	FLANGE CONNECTION	
4	1	FLOATER	
5	1	CHAMBER	

DESCRIPTION:

Level Measuring With displacer Transmitter

DRAWN BY: **MR.Yadegary** 2025/11/22
CHEKED BY: **MR.Zarrineh** 2025/11/22
DESIGNED BY: **MR.zalpour** 2025/11/22

PURCHASE:

NOTE:
Drawing no t to scale
Unit:mm

Rev:00

ARAMAK SANAT HOOSHMAND

WWW.ARAMAKCO.COM

EMAIL: SALES@ARAMAKCO.COM