NO.	QTY.	DESCRIPTION	MATERIAL	DESIGN	PROCESS CONNCTION	TOP FLANGE	C-C	VENT PLUG
1	1	CHAMBER	X	SIDE-SIDE	FLANGE 2" RF	FLANGE 3" RF	X	1/2"

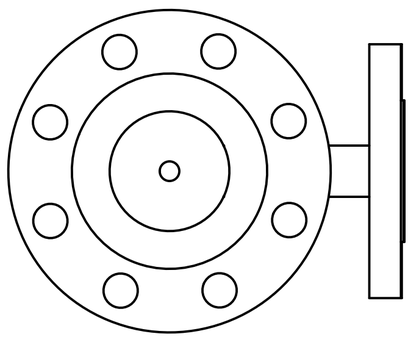

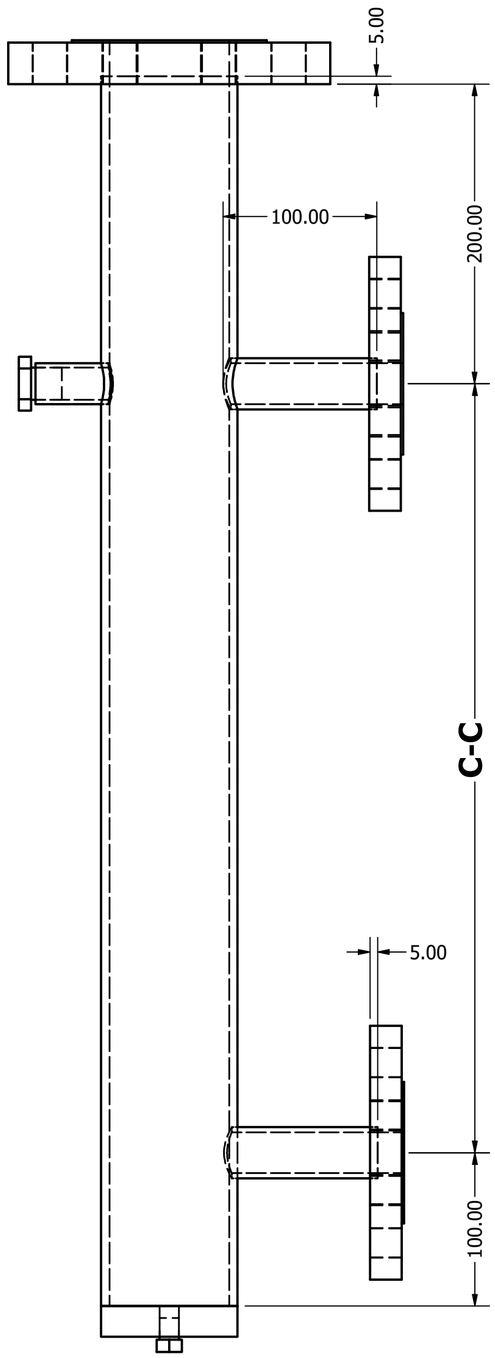

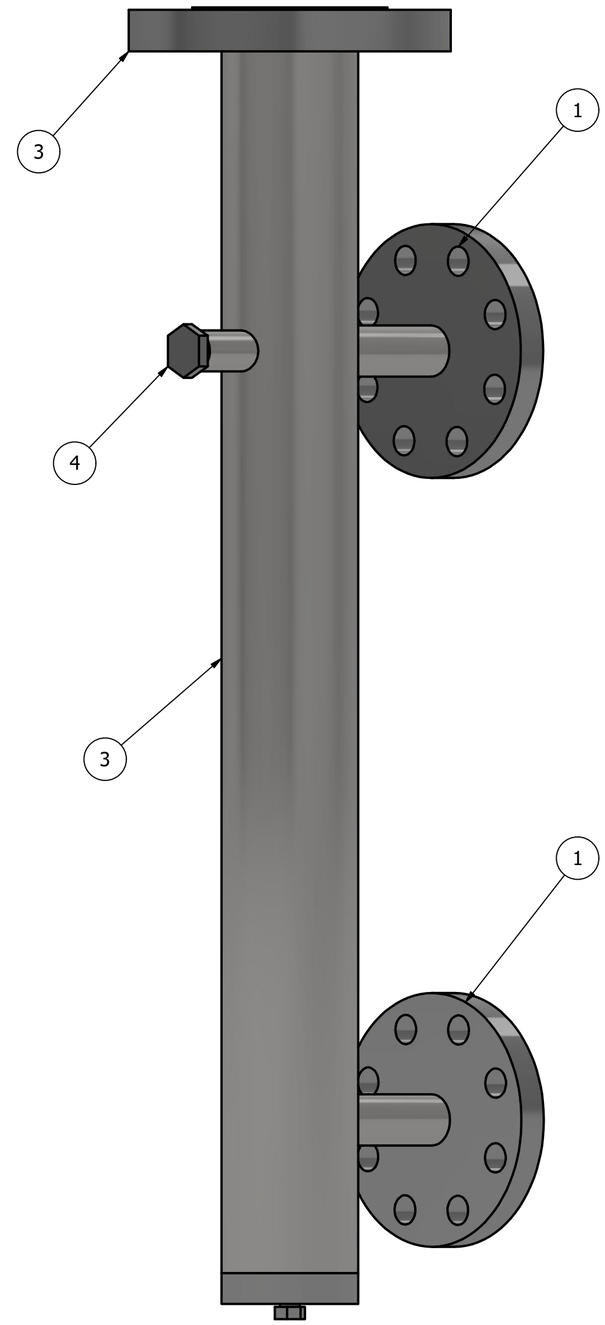

PART LIST			
ITEM	DESCRIPTION	MATERIAL	QTY.
1	FLANGE 2" RF	X	2
2	FLANGE 3" RF	X	1
3	MAIN PIPE	X	1
4	VENT PLUG	X	1

DESCRIPTION:

Orifice Plate

DRAWN BY: **MR.KHATIR** 2025/12/18
CHEKED BY: **MR.Yadegary** 2025/12/18
DESIGNED BY: **MR.zalpour** 2025/12/18

PURCHASE:

NOTE:
Drawing no t to scale
Unit:mm

Rev:00

ARAMAK SANAT HOOSHMAND

WWW.ARAMAKCO.COM

EMAIL: SALES@ARAMAKCO.COM